THIS COPY IS PROVIDED ON A RESTRICTED BASIS AND IS NOT TO BE USED IN ANY WAY DETRIMENTAL TO THE INTERESTS OF PANDUIT CORP.

PANDUIT P/N	WEIGHT
CHB2	.8 LB/100 PCS (360g/100 PCS)

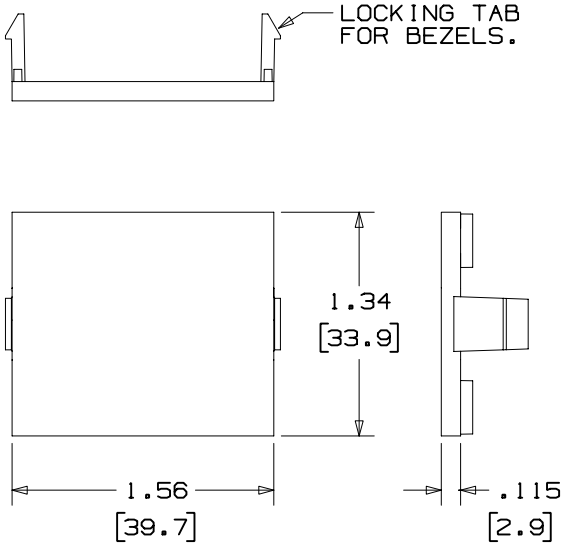

NOTES:

1. SEE CURRENT CATALOG FOR ADDITIONAL PART NUMBER SUFFIXES TO INDICATE COLOR AND OR PACKAGE QUANTITY.
2. THE BLANK(CHB2) IS TO BE USED WITH MINI-COM BEZELS.
3. DIMENSIONS IN PARENTHESES ARE IN METRIC.

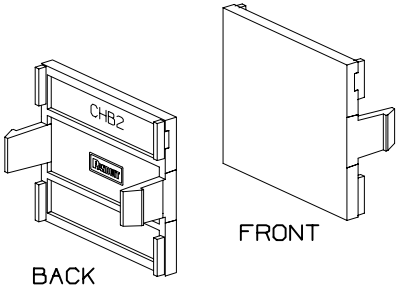

REV	DATE	BY	CHK	DESCRIPTION	ECN	CHK	CUST	SUP
1	9-12-97	RCA		A. REV'D TITLE WAS TWO POSITION MINI-COM BLANK (CHB2) FOR MINI-COM EXECUTIVE BEZELS.	35241-10			
R	3-6-96	DW	CEF	RELEASED TO PRODUCTION.	35241-10	CEF		

CAD FILENAME/LAYERS: D35241BJ_CHB2_01

PANDUIT CORP. TINLEY PARK, ILLINOIS

A

1/2 SIZE TWO POSITION BLANK INSERT(CHB2)

CUSTOMER DRAWING

UNLESS OTHERWISE SPECIFIED, DIMENSIONAL TOLERANCES ARE:
(.X) ± (.XXX) ±.010(.3)
(.XX) ±.03(.8) ANGLES ±

UNLESS OTHERWISE SPECIFIED, ALL DIMENSIONS ARE GIVEN IN INCHES, THIRD ANGLE PROJECTION.

DRAWN BY: DW
DATE: 3-6-96
CHECKED BY: CEF

MAT'L: ABS (94V-0)

SCALE: NONE

DRAWING NO.: 35241-10

DWG SIZE: A